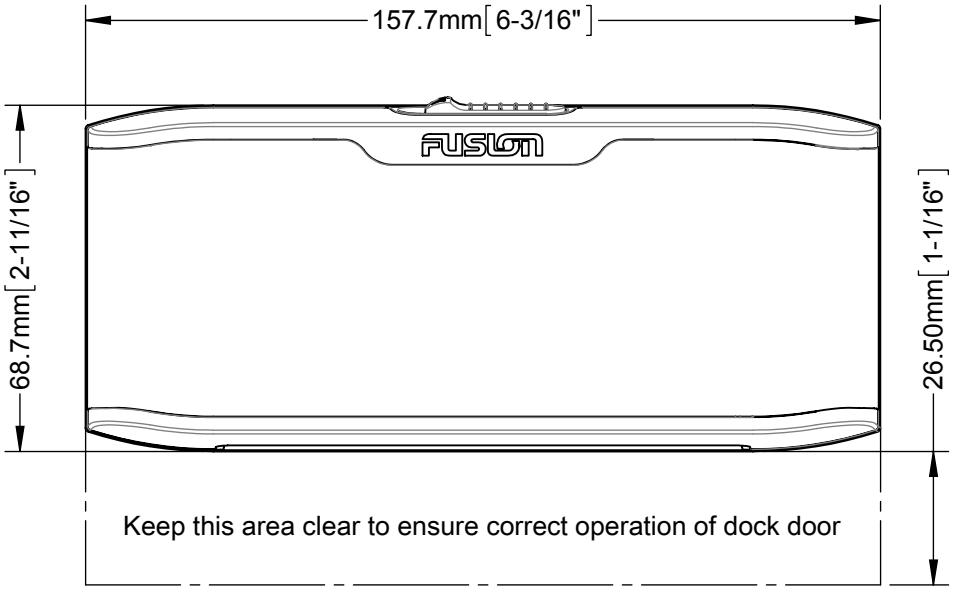
157.7mm[6-3/16"]
68.7mm[2-11/16"]
26.50mm[1-1/16"]
FUSION
Keep this area clear to ensure correct operation of dock door

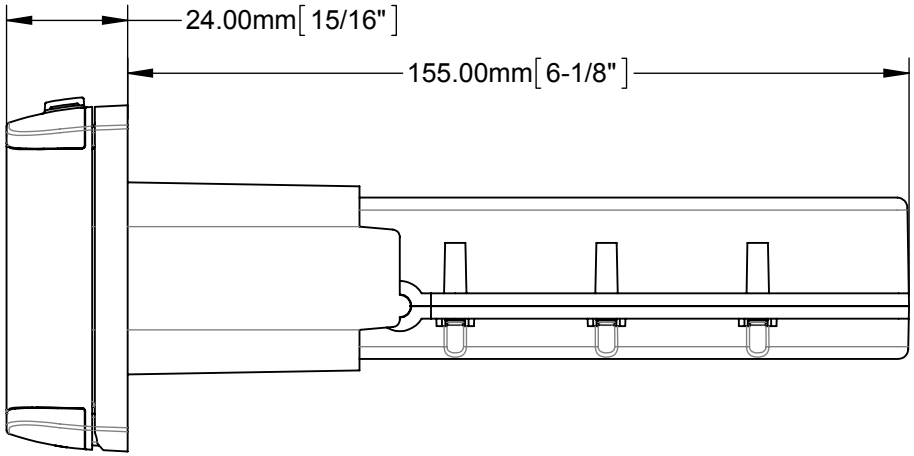
24.00mm[15/16"]
155.00mm[6-1/8"]